silver peak™

white paper

Accelerating EMC VNX Data Protection Solutions with Silver Peak

EMC RecoverPoint

• VNX Replicator

silver peak™ | white paper

Accelerating EMC VNX Data Protection Solutions with Silver Peak

Overview

EMC VNX is a unified storage system that provides options for customers of any size. Smaller businesses can utilize the VNXe as an affordable solution to store and protect their data. For medium-sized to enterprise businesses, the VNX is a flexible high performance solution to all storage and data protection needs. For businesses with replication requirements, the VNX family can utilize EMC RecoverPoint. Additionally, VNXe can use VNX Replicator for less demanding environments.

RecoverPoint is a data protection solution that provides local, and remote continuous data protection, allowing for any point-in-time data recovery. In the event of data loss, or corruption, data can be recovered across arrays and applications to a consistent state. This allows applications to be quickly restarted, resulting in shorter downtime.

While RecoverPoint and Replicator provide an efficient replication solution for VNX platforms, both are subject to limitations created by the wide area network (WAN). When the WAN connecting the two replication units has latency, packet loss, out-of-order packets, or limited bandwidth, replication throughput can be adversely affected resulting in missed recovery point objectives (RPOs) and potentially failed replication. Either of these expose the business to additional risk in the event of a recovery to the replica.

Silver Peak develops data center class replication acceleration software that fixes the problems that exist on the WAN, enabling more data to be replicated, in less time, and over longer distances. Silver Peak software can be deployed as a virtual machine (VX or VRX) on any hypervisor, or as a hardware appliance (NX). Silver Peak software solves WAN problems by deduplicating and compressing replication traffic, repairing dropped and out-of-order packets, and overcoming the effects of latency.

When the problems on the WAN have been repaired it is easy to meet, maintain, and even reduce RPOs. Silver Peak has also been qualified and is listed on the EMC Support Matrix with EMC SRDF/A for VMAX replication, MirrorView, and EMC VPLEX Geo. Additional Silver Peak and EMC testing has been performed with Data Domain Replicator, Isilon SyncIQ, Centerra Replication, Atmos replication, and Atmos data ingest.

This whitepaper details the benefits that Silver Peak Replication Acceleration provides for VNX and VNXe data protection with RecoverPoint and Replicator.

Silver Peak has been proven to accelerate VNX data protection solutions when 40 ms of latency or greater is present on the WAN (roughly 3991 km/2480 miles) and any of the following conditions exist:

- The WAN has packet loss or out-of-order, typically found on MPLS or Internet VPNs, or networks that are oversubscribed
- The WAN is shared by multiple applications
- The virtual version of RecoverPoint (vRPA) is deployed, and RAM limitations on the server prevent the use of deduplication and compression

Silver Peak can also help solve problems that can arise as new applications are added, and more data is replicated across the WAN. Environments that work today can be problematic in the future, potentially requiring bandwidth upgrades or infrastructure changes.

Audience

This white paper is intended for storage architects, IT engineers, storage administrators, professional service implementers, and SAN administrators who are responsible for architecting or implementing EMC VNX replication solutions with Silver Peak software for data protection and disaster recovery.

The Challenge of Replicating Over Distance

Most replication tools use the Transmission Control Protocol, TCP, to move data across the WAN. While TCP is a ubiquitous protocol, it does have limitations that can cause disruption to replication, resulting in missed RPOs or failed jobs. Typical disruptions are caused by latency, packet loss, out-of-order delivery of packets, and bandwidth quantity.

Latency across the WAN is caused by the geographic distance between data centers, along with the switching and routing equipment in use. Throughput is also affected by the amount, and quality, of the bandwidth used for replication. When the WAN suffers from dropped or out-of-order packets, it will have a detrimental effect on replication throughput. When latency is combined with dropped and/or out-of-order packets, throughput can drop so low as to cause RPO targets to be missed.

For example, when RecoverPoint is replicating across a WAN with 60ms of latency and 1% packet loss, throughput is reduced to 88 megabits-per-second (Mbps) on a 1 gigabit-per-second (Gbps) WAN, compared to 675 Mbps when no packet loss is present. VNX Replicator throughput is reduced to 68 Mbps on a 155 Mbps WAN with 80 ms of latency, compared to 155 Mbps when no packet loss is present. The reduction in throughput seen with RecoverPoint and VNX Replicator is due to the combination of latency and packet loss, and is commonly seen in data transfers across similar WAN connections.

Finally, the amount of bandwidth available for replication is a frequent problem in replication environments. When bandwidth is limited, replication throughput will also be limited, causing missed RPOs and failed backups.

Silver Peak's replication acceleration features can remove the impact of latency on throughput, while repairing dropped and out-of-order packets in real time, allowing all of the available bandwidth to be used. Silver Peak will also perform deduplication and compression, resulting in a much higher effective throughput across the WAN. All of these features combine to solve network problems that limit replication effectiveness, and cause missed RPOs putting the business at risk of data loss.

RecoverPoint Replication across a 1 Gbps WAN with 60 ms of latency and 1% packet loss

- 88 Mbps native throughput
- 675 Mbps accelerated throughput

VNX Replicator throughput across a 1 Gbps WAN with 80 ms of latency and 1% packet loss

- 68 Mbps native throughput
- 155 Mbps accelerated throughput

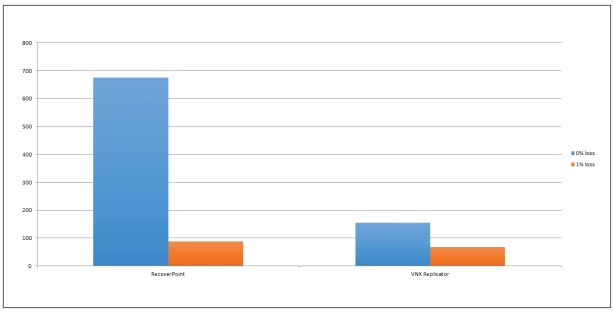

Figure 1: RecoverPoint and VNX Replicator Throughput

Solution Components

VNX Replicator Architecture

VNX Replicator provides efficient, asynchronous data replication over IP networks. The source and destination VNX systems communicate via a direct relationship, while data is transferred via a Data Mover Interconnect. Manual failover is used to change target file systems from read only to read/write. When the remote system is in read/write mode, data can be accessed for disaster recovery. A specific RPO can be configured via the "max time out of sync" parameter. By default the max time out of sync is set to 10 minutes.

VNX Replicator has the following benefits:

- Replicate file systems and Virtual Data Movers
- Replicate to a remote system across any distance
- Advanced replication scenarios like one-to-many, cascaded, and incremental attach
- One-to-many replication supports up to three destinations
- Data Mover interconnects support bandwidth scheduled and throttling

RecoverPoint Architecture

EMC RecoverPoint provides local and remote protection for mission-critical applications and includes CDP which allows it to offer DVR-like application recovery. RecoverPoint intercepts every block written by an application that flows across the SAN and saves a copy of the block in a disk-based journal, which improves application recovery by enabling a DVR-like point-in-time recovery of data. Unlike host-based or array-based replication solutions, RecoverPoint is an appliance-based, out-of-band data protection solution designed to protect all SAN-based production data regardless of the host or storage array. RecoverPoint enables customers to simplify their point-in-time data recovery while centrally managing their recovery processes.

Mission-critical applications require recovery aligned to the available RPO and RTO. For example, within any customer environment, there may be multiple applications, each with different data protection objectives for RPO and RTO. Common solutions for some of these applications include:

- Daily operational backups for 24-hour operation protection with weekly full backups for longer-term archive
- Using periodic disk-based snapshots with remote replication to protect data in event of disaster in a local site when the business needs to fail over to a remote location and be up and running in a short timeframe
- Using synchronous or asynchronous replication to enable quick recovery in the event of physical disk loss, particularly in test and development environments all of these solutions have challenges. The nightly backup may fail, or a data loss may occur 12 hours into the new backup period. If data loss occurs 12 hours into the new backup period, any new data created since the last backup is lost, since the system can be rolled back only to the last recovery point.

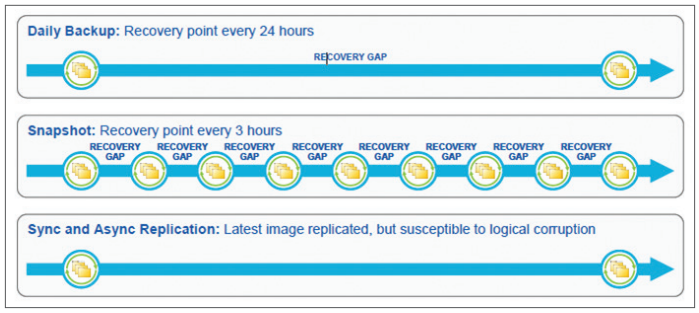

Figure 2: RecoverPoint Data Protection Options

RecoverPoint uses a journal-based architecture that captures time-indexed recovery points, capturing changes as small as a single write. Using this journal, RecoverPoint can ensure data recovery back to any point in time. Users can bookmark recovery points to recover back to specific points in time, such as the close of a quarter or a pre-patch state. It is also possible to create application-aware I/O bookmarks.

There are several features that RecoverPoint brings to a data protection environment. These include the following:

- **Designed for the Cloud**
- RecoverPoint makes your infrastructure simpler to manage and more efficient to operate. Building your cloud begins with virtualization. RecoverPoint can make your virtual infrastructure simpler to protect.
- **Improves reliability**
- With RecoverPoint, you can quickly determine that RecoverPoint has protected an application's data. Additionally, RecoverPoint has wizards that utilize its instant recovery capability, enabling quick access to protected application data.
- **Handles application growth**
- Customers typically have more than a single application in their data center. RecoverPoint provides protection and recovery for data regardless of the server or storage that contains the application. RecoverPoint supports all common open system platforms including many flavors of UNIX and Windows, and server virtualization solutions such as Microsoft Hyper-V and VMware. RecoverPoint supports EMC Symmetrix® and EMC VNX series storage arrays as well as Fibre Channel storage from vendors such as Hitachi, HP, HDS, IBM, and NetApp.
- **Provides instant recovery**
- Customers see value to repurposing protected data, such as for backup acceleration, disaster testing, and cloning of production environments for development and test environments. Using RecoverPoint, application data can be recovered to an exact point in a matter of seconds. Once the data is recovered, it can then be manipulated without impact to production applications or the recovered copy. Any changes made to the data are only temporary, and will be automatically discarded by RecoverPoint when access to the data is no longer required.
- **Supports a zero RPO**
- RecoverPoint captures every change to production volumes, which ensure a complete restoration with no data loss. Additionally, the RecoverPoint journal enables a DVR-like any-point-in-time recovery, allowing you to restore data to a point in time before a corruption event.
- **Augments existing backup technologies**
- The user can set a policy that tells RecoverPoint to maintain a zero RPO for a set number of days and then consolidate the data to a single recovery point per day week or month. A tape-based backup that is used on a daily basis risks data loss since it only gives a 24-hour RPO. Using RecoverPoint in conjunction with your tape-based backup eliminates worries about the RPOs, reduce backup window issues, and help eliminate worries about your tape-based backup process.

- **Ensures consistent recovery**
- Application recovery is becoming more complex and time-consuming. RecoverPoint includes utilities that integrate with Microsoft Exchange Server and Microsoft SQL Server though VSS. Additionally, RecoverPoint ships with application programming and scripting interfaces that enable business-specific processes to be integrated with RecoverPoint.

Silver Peak VXOA Architecture

Silver Peak's Virtual Acceleration Open Architecture (VXOA) provides robust WAN optimization that addresses the bandwidth, latency, and packet loss issues that are common to most enterprise environments. Silver Peak's optimization techniques are all performed in real-time and primarily at the network (IP) layer to ensure maximum performance across the widest range of applications and WAN environments.

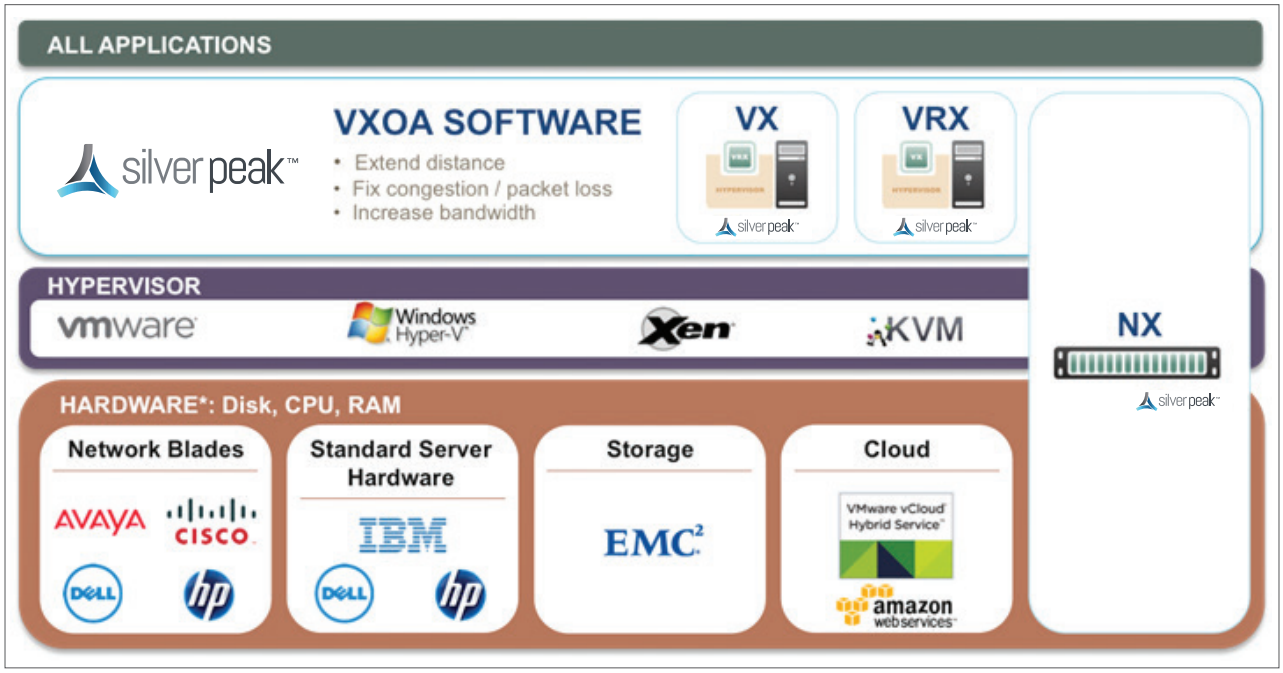

Figure 3 Silver Peak VXOA Architecture

Silver Peak appliances leverage the following Virtual Acceleration Open Architecture (VXOA) technology components to accelerate all enterprise applications in a secure and reliable fashion:

Network Memory: Network Memory inspects all traffic that is sent between clients and servers, storing information as a local instance in Silver Peak appliances. Repetitive information is delivered locally rather than sent across the WAN, improving application performance and WAN utilization. Cross-flow payload and header compression provide additional gains on first-time data transfers and non-repetitive traffic.

Network Integrity: Silver Peak employs a variety of real-time techniques to address packet delivery issues common to shared WAN technologies, such as MPLS and Internet connections. These include adaptive Forward Error Correction (FEC) and Packet Order Correction (POC) to overcome dropped and out-of-order packets, and advanced Quality of Service (QoS) techniques to prioritize traffic and guarantee network resources.

Network Acceleration: Silver Peak mitigates the impacts of latency across the WAN by using various TCP acceleration techniques, like adjustable window sizing and selective acknowledgements. These tools help to overcome inherent chattiness that can otherwise hamper application performance across a WAN.

Dynamic Path Control: Silver Peak uses real-time network intelligence to determine the fastest, most-reliable and most-available path for application performance and data mobility.

Encryption: Silver Peak can encrypt network traffic using an AES-256 IPSEC VPN. Any traffic sent between Silver Peak software instances can be accelerated and encrypted at wire speed.

Virtual Deployment Options: Silver Peak can be deployed as a physical appliance (NX) or a virtual instance (VX/VRX). Silver Peak's virtual products can be deployed on any hypervisor (VMware, Microsoft Hyper-V, Xen, and KVM) and on any server hardware that meets the minimum requirements.

Silver Peak offers two virtual appliance product lines, addressing the needs of WAN optimization and replication acceleration users.

VX WAN optimization software is used for end user and corporate applications, like email, intranet sites, file shares, VoIP, video, and storage applications.

VRX Replication acceleration software is used specifically for storage applications, like backup, replication, and data migrations.

WAN optimization software can be used to accelerate storage and end user applications, while replication acceleration software is for storage applications only.

The Average Optimized Data Throughput assumes a 6:1 data reduction, which is common with replication traffic.

Silver Peak Model	VRX-2	VRX-4	VRX-6	VRX-8
WAN Throughput	20 Mbps	100 Mbps	300 Mbps	1 Gbps
Average Optimized Data Throughput	50 GBph	250 GBph	750 GBph	2 TBph

Table I: Silver Peak VRX Models

Silver Peak Model	VX-1000	VX-2000	VX-3000	VX-5000	VX-6000	VX-7000
WAN Throughput	4 Mbps	10 Mbps	20 Mbps	50 Mbps	100 Mbps	200 Mbps
Average Optimized Data Throughput	8 GBph	20 GBph	50 Gbph	112 GBph	225 GBph	450 GBph

Table 2: Silver Peak VX Models

Test Methodology

A dedicated test environment was deployed to test deployment scenarios across several WAN configurations with varying latency and loss. Testing was performed with physical RecoverPoint Appliances (RPA) and virtual RecoverPoint Appliances (vRPA). For physical RPA testing, Silver Peak VRX-8 software running on VMware vSphere was used for acceleration Figure 2. While testing with the vRPA, Silver Peak VRX-4 software was used for acceleration. Using the VRX-4 allowed the vRPA and VRX-4 to run on the same VMware vSphere instance, providing a single server solution for data protection.

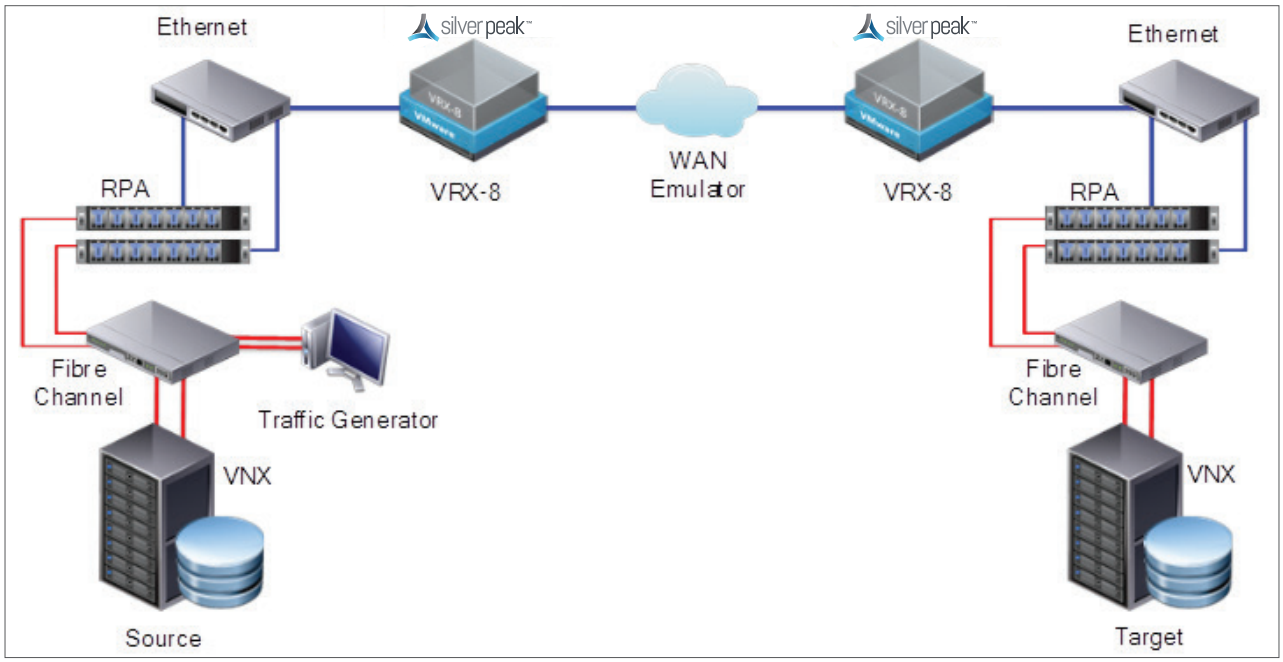

Figure 4: RPA/VRX-8 Test Bed

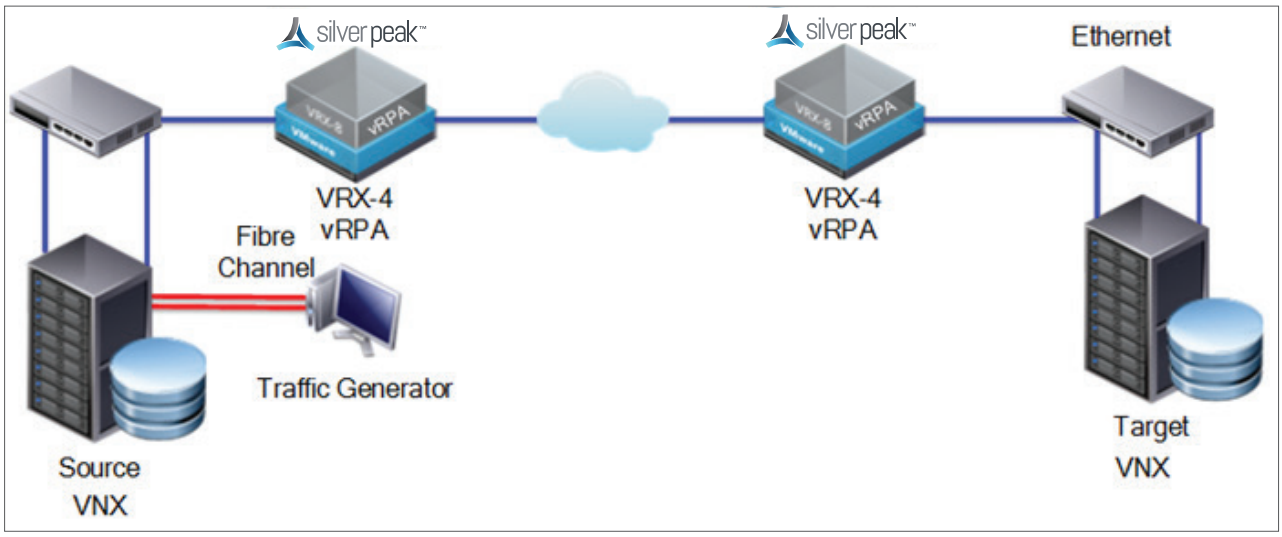

Figure 5: vRPA/VRX-4 Test Bed

RecoverPoint Test Suite Overview

The following components were used for RecoverPoint RPA and vRPA testing with Silver Peak.

Device/Tool	Name	Version
RecoverPoint SE	RPA, vRPA	4.0.SP1 (k.137)
Source Array	VNX 5800	CLARiiON Splitter Version 5.33.000.5.015
Target Array	VNX 7600	
Silver Peak Appliances	VRX-8, VRX-4	VXOA 6.2.0.0_46411
WAN Emulator	KWANEM	52909

Table 3: Test Bed Components

Bandwidth Tested	Latencies Tested	Loss Percentages Tested
RPA 1 Gbps	0, 20, 40, 60, 80, 120, 160, 200, 300 ms	0, 0.1, 1%
vRPA 100 Mbps	0, 40, 80, 120 ms	0, 0.1, 1%

Table 4: Test Parameters

Test Results

The tables below represent the common loss and latency characteristics for WAN connections. These values are averages as actual WAN conditions vary based on many factors, including over subscription and actual cable miles between sites.

WAN Type	Average Packet Loss
Private Line	0%
MPLS	.1%
Internet VPN	1%
Satellite	5%

Table 5: Average WAN Packet Loss

Distance	Average Latency
Metro	5ms
Regional US	25ms
Coast to Coast US	80ms
US to Europe	150ms
US to Asia	300ms

Table 6: Average WAN Latency

vRPA Test Results

All vRPA testing was performed using a single server to host the vRPA and the VRX-4 software. Performance across latencies, with packet loss of 0.1% and 1%, is consistent when Silver Peak is used to accelerate the replication traffic. Without Silver Peak, RecoverPoint throughput is reduced by the combination of packet loss and latency. Figure 4 shows replication throughput from the vRPA with 0.1% packet loss, while Figure 5 shows vRPA throughput with 1% packet loss. In both charts, Silver Peak helps RecoverPoint maintain a consistent throughput for replication, even with packet loss and latency.

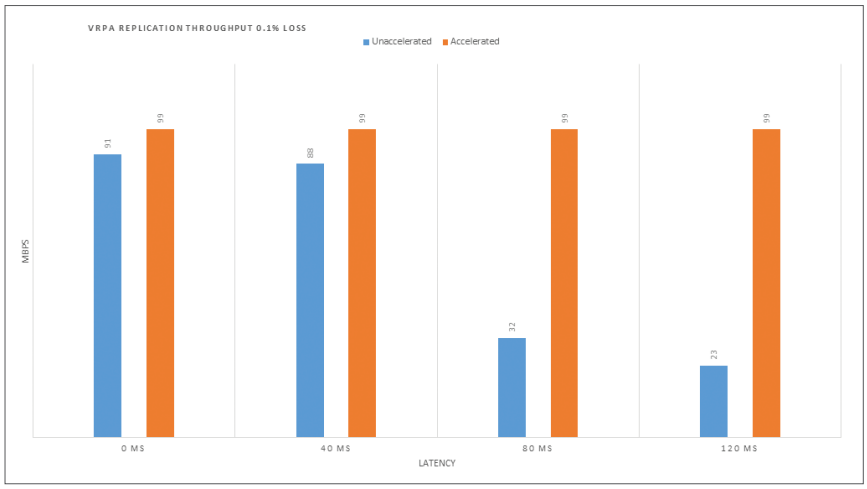

Figure 6: vRPA Test Results with 0.1% Loss

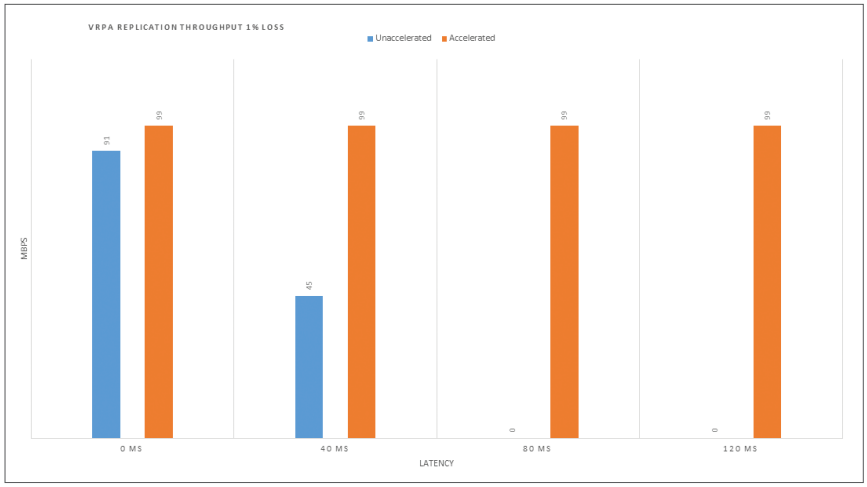

Figure 7: vRPA Test Results with 1% Loss

RPA Test Results

Physical RPA testing shows similar results to vRPA testing. RecoverPoint replication throughput is reduced on WAN connections that have latency and packet loss present. As latency increases, throughput decreases. With high levels of packet loss, 1%, and high latency, greater than 80 ms, the RPA enters a high load state and is unable to maintain replication. Default configuration options were used for this testing, however tuning options are available to reduce high load states albeit at a reduced throughput. When Silver Peak software is deployed with RecoverPoint, replication throughput is maintained even when high levels of packet loss and latency are present on the WAN. Figure 6 shows replication throughput with 0.1% packet loss, typical of an MPLS network, with varying latency. Figure 7 shows replication throughput with 1% packet loss, typical of an Internet connection, with varying levels of latency.

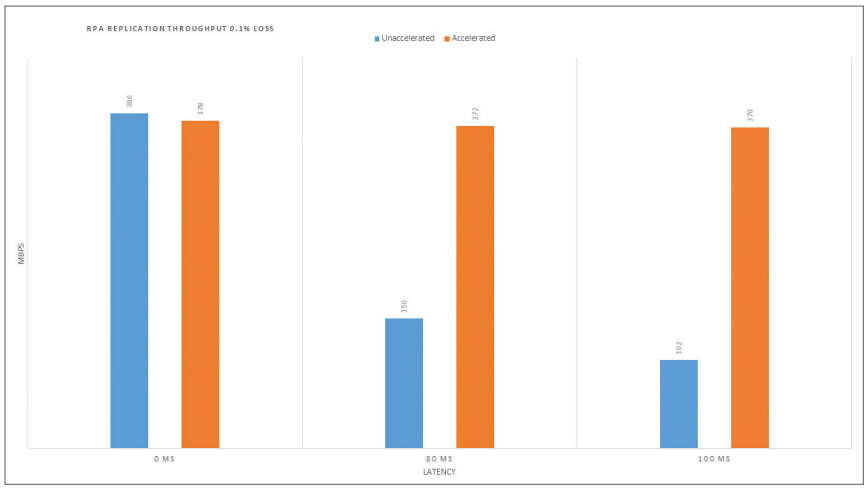

Figure 8: RPA Test Results with 0.1% Loss

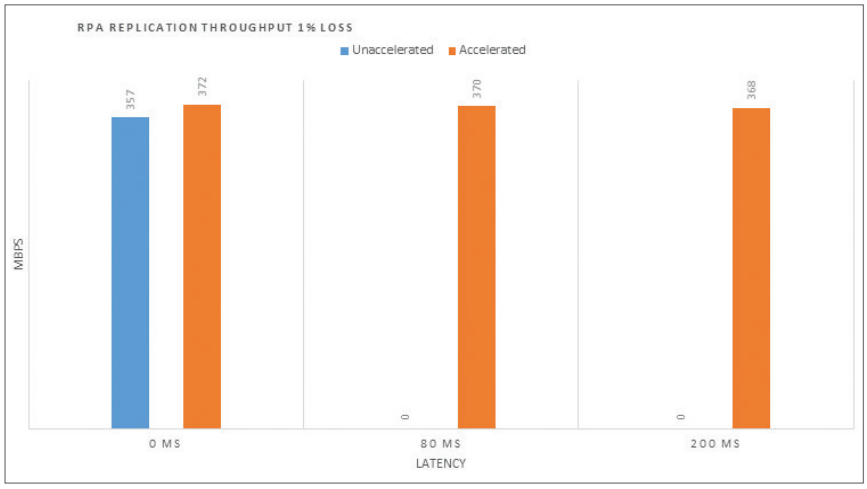

Figure 9: RPA Test Results with 1% loss

RecoverPoint Throughput With Increasing Latency

Figure 8 demonstrates the ability for Silver Peak software to maintain throughput with RecoverPoint software up to 300 ms of latency. Silver Peak's acceleration techniques enable replication in environments that were difficult without acceleration.

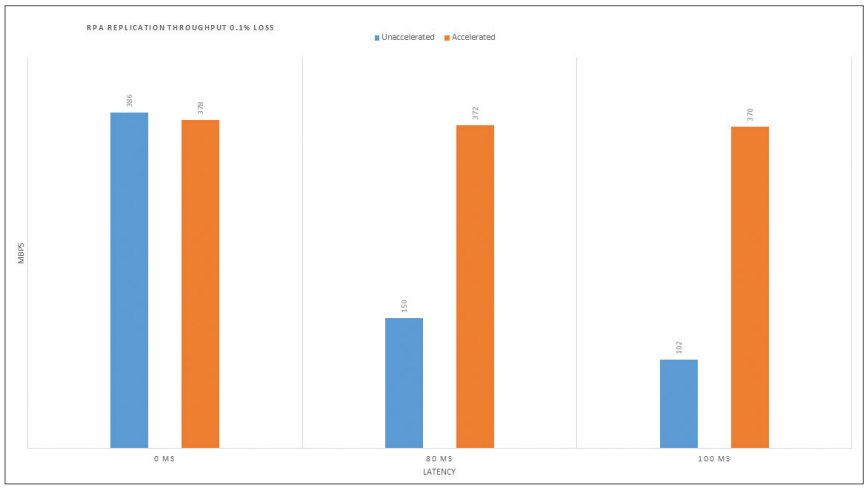

Figure 10: RPA Throughput with Increasing Latency

VNX Replicator Testing

Testing with VNX Replicator and Silver Peak software has been performed by Silver Peak and EMC. A full report is available on EMC PowerLink. Simulated WAN connections of 45 Mbps and 155 Mbps were used with multiple latency and loss values.

Bandwidth Tested	Latencies Tested	Loss Percentages Tested
45 Mbps	0, 80, 200 ms	0, 0.1, 1%
155 Mbps	0, 80, 200 ms	0, 0.1, 1%

Table 7: VNX Replicator Test Parameters

When 0.1% packet loss is present on a 45 Mbps WAN, VNX Replicator is able to consistently fill the WAN up to 200 ms of latency. When Silver Peak software is accelerating the replication traffic, deduplication and compression combine to increase throughput over 5X, figure 9. When bandwidth is increased to 155 Mbps the effects of latency and loss become pronounced as latency increases. With no latency, 0 ms, and 1% loss, VNX Replicator is able to fill the WAN. As latency increases, throughput is reduced to 68 Mbps at 80 ms of latency, and 28 Mbps at 200 ms of latency. Silver Peak software repairs the packet loss and removes the effects of latency to increase throughput to fill the WAN. When deduplication and compression are enabled, throughput is increased to as much as 545 Mbps across the same 155 Mbps WAN.

When 0.1% packet loss is present on a 45 Mbps WAN, VNX Replicator is able to consistently fill the WAN up to 200 ms of latency. When Silver Peak software is accelerating the replication traffic, deduplication and compression combine to increase throughput over 5X, figure 9. When bandwidth is increased to 155 Mbps the effects of latency and loss become pronounced as latency increases. With no latency, 0 ms, and 1% loss, VNX Replicator is able to fill the WAN. As latency increases, throughput is reduced to 68 Mbps at 80 ms of latency, and 28 Mbps at 200 ms of latency. Silver Peak software repairs the packet loss and removes the effects of latency to increase throughput to fill the WAN. When deduplication and compression are enabled, throughput is increased to as much as 545 Mbps across the same 155 Mbps WAN.

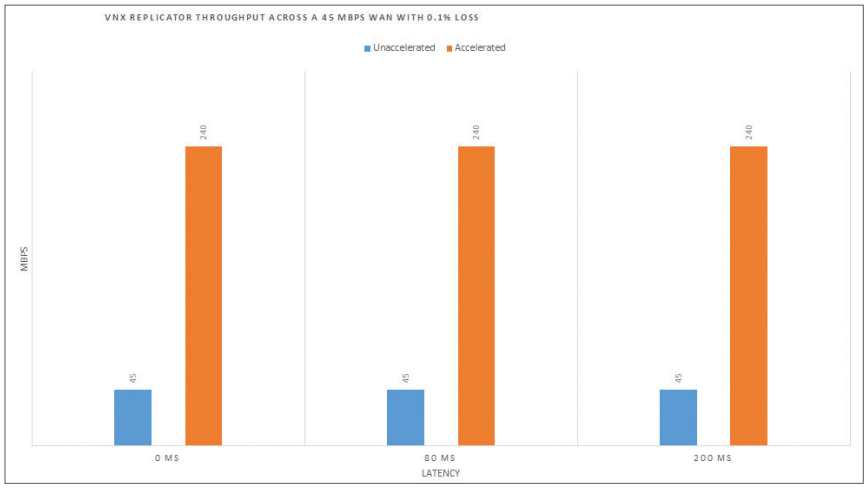

Figure 11: VNX Replicator throughput across a 45 Mbps WAN with .1% loss

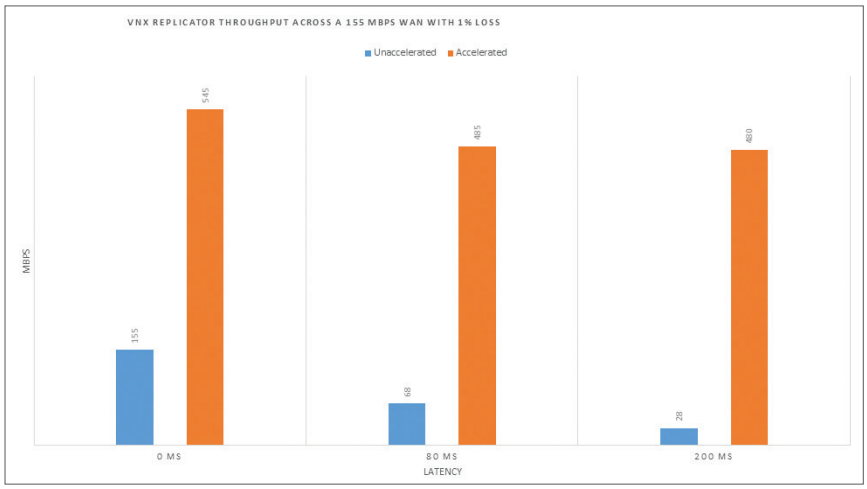

Figure 12: VNX Replicator throughput across a 155 Mbps WAN with 1% packet loss

Use Case Examples

The following use cases are based on data that was collected during joint Silver Peak and EMC testing, as well as an average of data collected from installed customers.

Regional Replication across an Internet VPN with VNX Replicator

Replicating across an Internet VPN is becoming more common as a method to reduce the cost of disaster recovery. Utilizing an Internet VPN for replication traffic can be a cost effective solution for most businesses.

Without Silver Peak software accelerating the WAN, throughput would be severely limited due to the amount of lost and out-of-order packets that are present on Internet connections.

For this use case we will use the following assumptions:

- WAN
  - 45 Mbps of bandwidth available for replication
  - 80 ms of latency – the equivalent of Hopkinton, MA to Santa Clara, CA
  - 1% packet loss – the average amount of loss across an Internet VPN connection
- Data Set
  - 5 TB mix of user data, email, databases, and other applications
  - 10% daily change rate during business hours (8am to 5pm)
  - 2 hour RPO

A 5 TB data set with a 10% change rate will have an average of 512 GB per day that needs to be replicated. In most scenarios, the change rate will vary during the day, creating periods when more data must be replicated to maintain the desired RPO. For simplicity, we will assume a uniform change rate across 8 hours resulting in 64 GB of data per hour that needs to be replicated.

- Without Silver Peak the average throughput will be 68 Mbps
  - The 64 GB of data per hour will take approximately 2.8 hours to replicate
  - The 2 hour RPO will be missed by 48 minutes
- With Silver Peak the average throughput will 485 Mbps – a 7X increase in throughput
  - The 64 GB of data per hour will take approximately 36 minutes
  - The 2 hour RPO will be maintained, and reduced to .6 hours

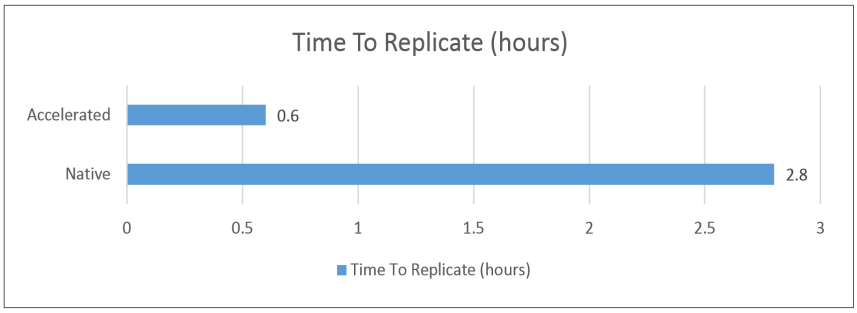

Figure 13: VNX Replicator Case Study

International Replication with RecoverPoint across an MPLS WAN

Multiprotocol Label Switching (MPLS) connections provide good value for money when compared to private or leased lines. However, MPLS WANs have approximately .1% packet loss on average, and can have a high number of out-of-order packets. When replication traffic is dropped, or consistently delivered out-of-order, it must be retransmitted across the WAN. Retransmits increase the latency, reduce usable bandwidth, and decrease the throughput of RecoverPoint replication. Even with the potential for loss and out-of-order, MPLS connections can still provide consistent performance when Silver Peak software is used.

For this use case we will use the following assumptions:

- WAN
  - 350 Mbps of available bandwidth for replication
  - 100 ms of latency – the equivalent of Boston, MA to London, UK
  - .1% packet loss – the average loss on an MPLS connection
- Data Set
  - 20 TB mix of user data, several databases, application data, and an email server
  - 10% daily change rate during business hours (8am to 5pm)
  - 2 hour RPO

Our 20 TB dataset will have an average of 2 TB per day that needs to be replicated. In most scenarios the change rate will vary during the day, creating periods when more data must be sent across the WAN to maintain the specified RPO. To make the math simple we will assume a uniform change rate across 8 hours resulting in 250 GB of data per hour that needs to be replicated. When we take our 2 hour RPO into account the amount of data that must be sent every hour is 250 GB.

- Without Silver Peak the average throughput will be 36.7 GB per hour
  - The 250 GB of changed data will take approximately 6.8 hours to replicate
  - The 2 hour RPO will be missed by 4.8 hours
- With Silver Peak the average throughput will be 133 GB per hour – a 3.6X increase in throughput
  - The 250 GB of changed data will take approximately 1.8 hours to replicate
  - The 2 hour RPO will be maintained

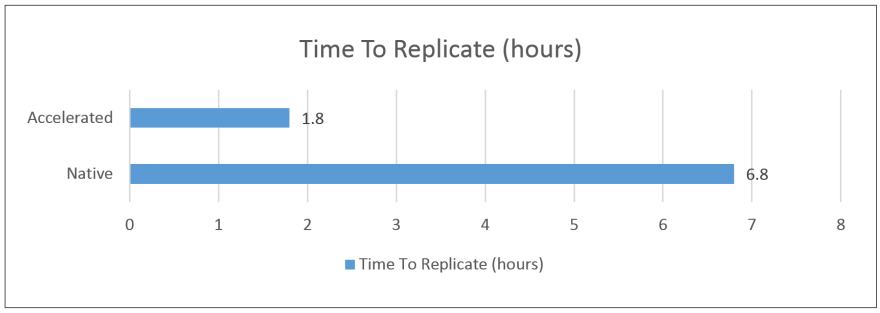

Figure 14: RecoverPoint Case Study

When Should Silver Peak be deployed with VNX Replication

Based on joint testing for both VNX Replicator and EMC RecoverPoint, we recommend that Silver Peak be deployed in the following scenarios

RecoverPoint Continuous Remote Replication
40 ms of latency or higher with packet loss greater than 0.1%
vRPA is deployed on a server without sufficient resources for RP deduplication (8 CPU, 8 GB RAM)
Latency greater than 150 ms on any network, with 0% packet loss
The WAN is shared between replication and other applications

Table 8: Silver Peak Use Cases for RecoverPoint

VNX Replicator
40 ms of latency or higher
Packet loss greater than 0.1%
Replication throughput is constrained due to limited bandwidth
The WAN is shared between replication and other applications

Table 9: Silver Peak Use Cases for VNX Replicator

While Silver Peak software provides a solution to overcome the limitations that the WAN can impose on replication throughput, there are scenarios where Silver Peak will provide limited value. For example, synchronous replication requires high bandwidth, low latency (less than 5ms), and no packet loss. Because the WAN connection is not constrained by bandwidth, high latency, or quality, the replication traffic will not benefit from acceleration.

Silver Peak software should not be used when:
Synchronous replication is used
Packet loss is 0% with low latency
Replication throughput is not constrained by bandwidth or competing applications

Table 10: Use Cases Not to Use Silver Peak

Example Architectures

Single Server Deployment of RecoverPoint vRPA and Silver Peak VRX Software

A single server deployment is useful when physical resources are limited, like in a remote office. Deploying RecoverPoint and Silver Peak software on a single server provides a self contained data protection solution that requires minimal resources. The WAN port on the vRPA can use the Silver Peak software as the default gateway, or use software defined networking to accelerate replication traffic.

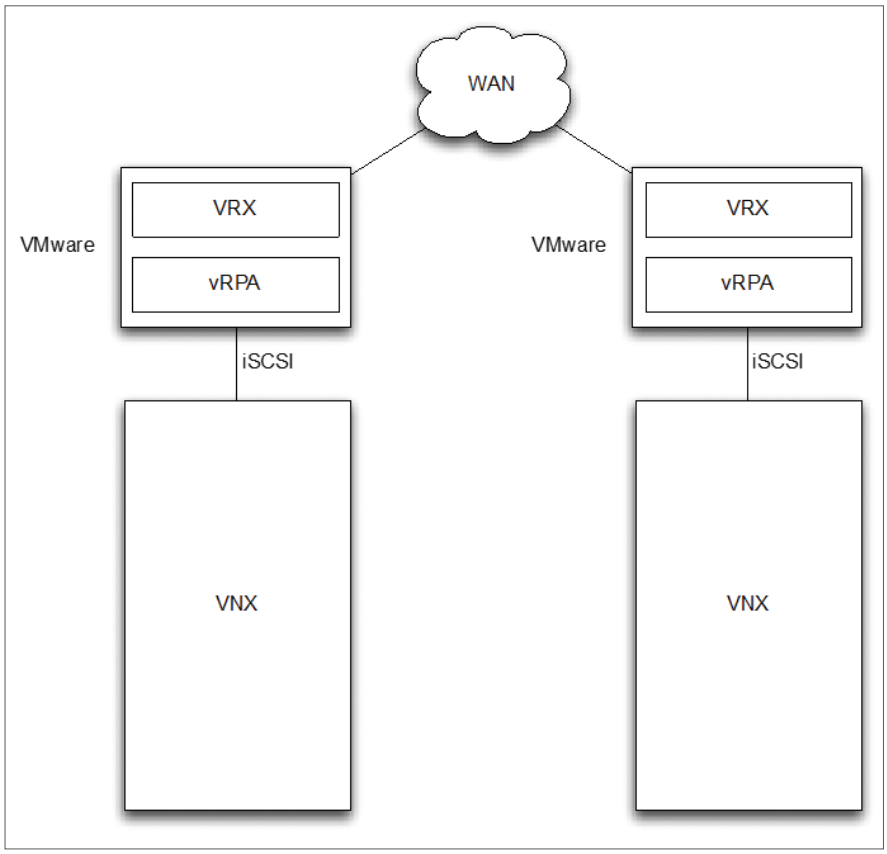

Figure 15: Single Server vRPA and Silver Peak Architecture

Multiple Server Deployment of RecoverPoint vRPA and Silver Peak VRX Software

Environments with multiple hypervisors provide more flexibility for deployment of RecoverPoint and Silver Peak software. Using multiple servers allows higher throughput by balancing the workload across multiple vRPAs, utilizing more CPU and RAM resources. Silver Peak software can be deployed on a dedicated hypervisor, or on a shared hypervisor with a RecoverPoint vRPA. The WAN port on the RPAs will use the Silver Peak software as the default gateway to accelerate replication traffic.

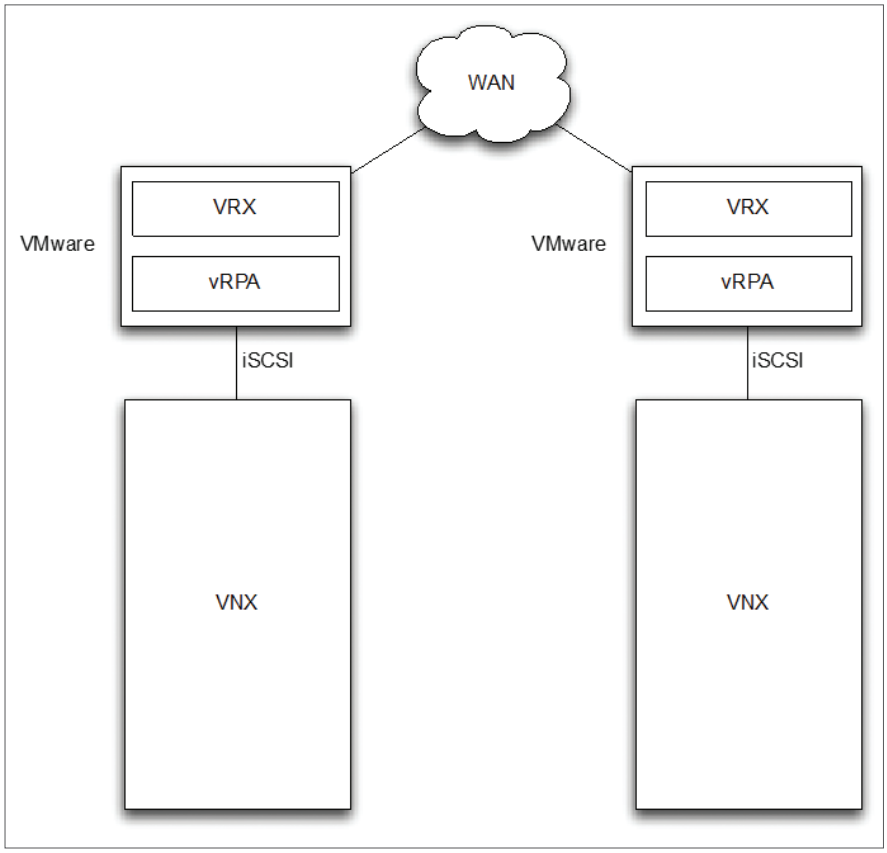

Figure 16: Multi Server vRPA and Silver Peak Architecture

Physical RPA and Silver Peak VRX Software

Traditional RecoverPoint deployments that utilize physical RPAs can also easily be accelerated and optimized by Silver Peak software. In these environements the Silver Peak software will be deployed on a hypervisor that is connected to the same network as the RPAs. The WAN port on the RPAs will use the Silver Peak software as the default gateway to accelerate replication traffic.

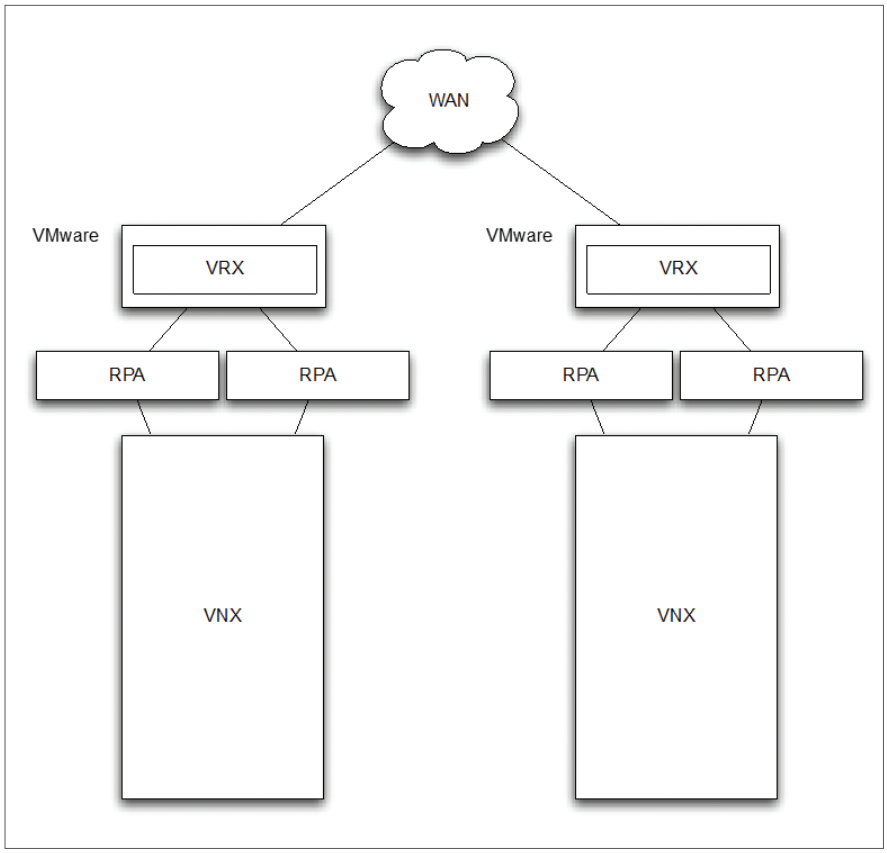

Figure 17: Physical RPA and Silver Peak Architecture

VNX Replicator and Silver Peak software

Silver Peak software will be deployed on a hypervisor that is connected to the same LAN as the VNX array. A static route is used to direct replication traffic to the Silver Peak software for acceleration across the WAN.

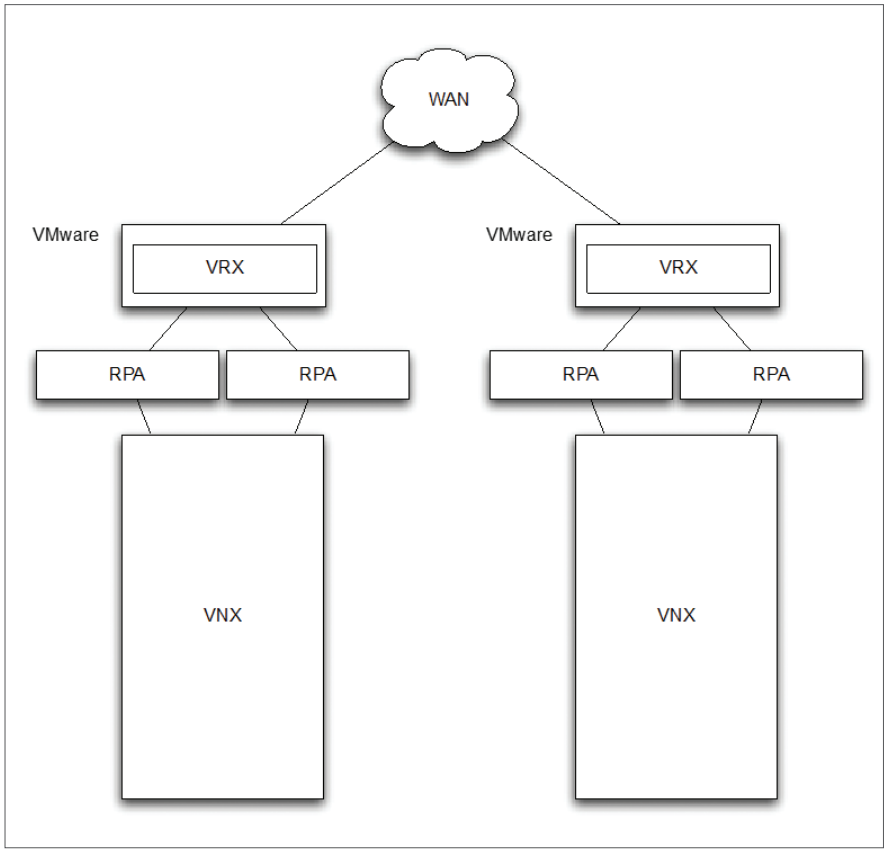

Figure 18: VNX Replicator and Silver Peak Architecture

Deployment Architectures

In all deployment scenarios, the Ethernet fabric is key to performance. Replication traffic should be consolidated one a single Ethernet switch when possible. This allows replication traffic to be optimized and accelerated before traversing the rest of the Ethernet network and the WAN. Using a single switch to connect the Silver Peak software and replication network ports reduced the potential for packets to be dropped on the LAN when traversing inter-switch links between Ethernet switches.

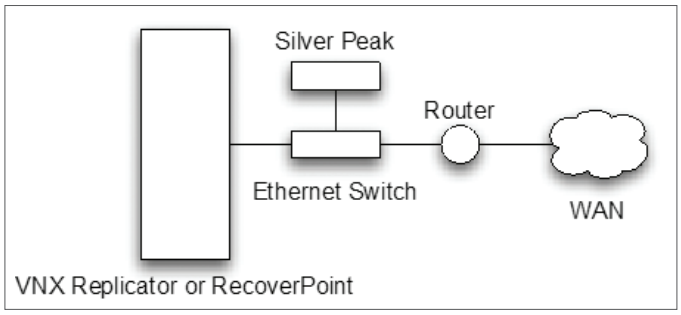

Figure 19: Network Switch Architecture

Silver Peak Deployment Options

This section contains a high level overview of the various Silver Peak deployment options. Additional information is available in the Silver Peak Network Deployment Guide.

Silver Peak VRX (Server Mode)

This is the recommended deployment mode for Silver Peak VRX software and RecoverPoint or VNX Replicator. Using Server Mode removes configuration from the network, removing any network interruptions. Silver Peak VRX software is deployed as a virtual appliance on the network and uses a single IP Address. VRX is designed as a Replication Accelerator and should be connected as close to the VNX or RecoverPoint appliances on the network as possible, preferably on the same network switch. When the Silver Peak appliance is not connected to the same network switch, the replication traffic sent across the Ethernet fabric will be subject to any performance limitations or congestion on the fabric. No network changes are required for a VRX deployment, as the default gateway or the RecoverPoint WAN port will be changed to the Silver Peak appliance IP address. For VNX Replicator deployments static route can be used.

Using this deployment method is non-disruptive to the network due to the changes being made in the RPA, vRPA, or VNX.

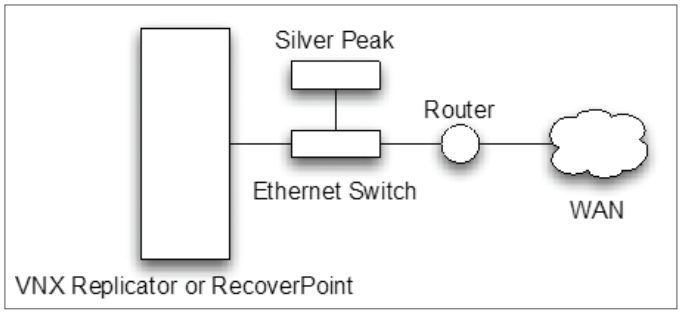

Figure 20: Silver Peak Server Mode Deployment

Silver Peak Out-of-Path (Router Mode)

When an out-of-path deployment is used, the Silver Peak appliance is not in the direct path of network traffic. Because the appliance is not in the data path, a network-based redirection technique like Policy Based Routing (PBR), Web Cache Communication Protocol (WCCP), or Virtual Router Redundancy Protocol (VRRP), must be used to forward traffic to the appliance. The traffic forwarding is transparent to replication, and requires no changes to the RecoverPoint appliance or VNX.

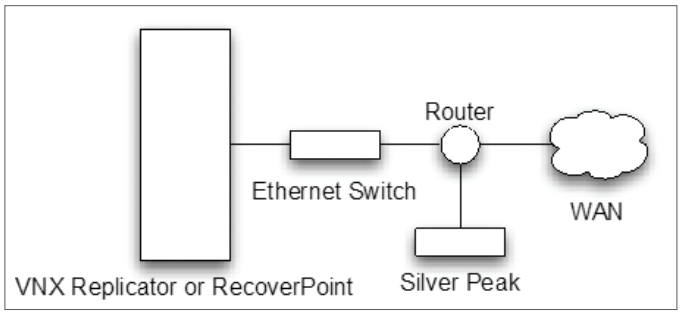

Figure 21: Silver Peak Router Mode Deployment

Silver Peak In-Line Deployment (Bridge Mode)

When an in-line deployment is used, the Silver Peak appliance is inserted in-line between the WAN router and the Ethernet switch. With this deployment method, the Silver Peak appliance will intercept all network traffic destined for the WAN. The appliance will accelerate traffic flows using the Silver Peak tunnel unless a rule has been created to pass through the traffic.

This deployment method does not require any changes to the network switch or WAN router. WAN downtime is required for the Silver Peak appliance to be inserted into the data path. In-line Silver Peak deployments are transparent to replication traffic and require no changes on the RecoverPoint appliance or VNX.

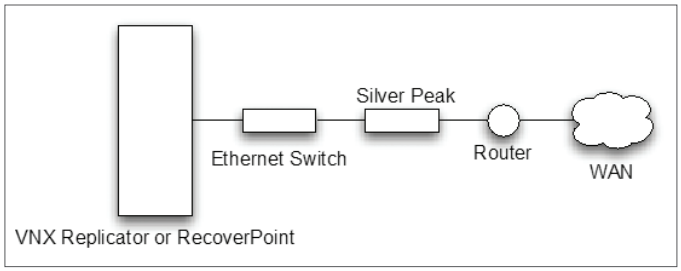

Figure 22: Silver Peak Bridge Mode Deployment

High Availability Silver Peak Deployments

Silver Peak appliances can be deployed in highly available configurations using either network redirection with out of path deployments, or Velocity deployments with multiple appliances. When an out of path deployment is used with WCCP, PBR, or VRRP, multiple Silver Peak appliances can be configured with the redirection method managing fail over.

A VRX deployment uses a simple form to configure VRRP between two or more appliances. A virtual IP address is created that is shared among all of the appliances. In the event that an appliance fails, the virtual IP address will be moved to a surviving appliance.

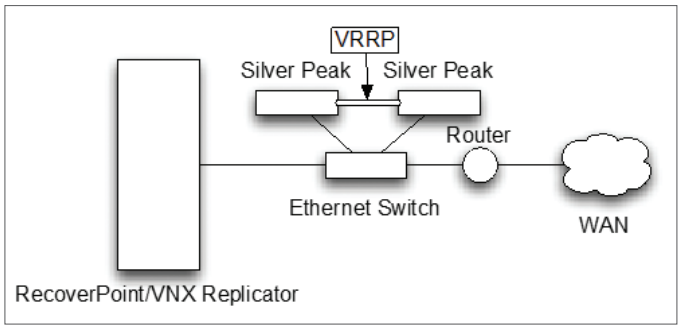

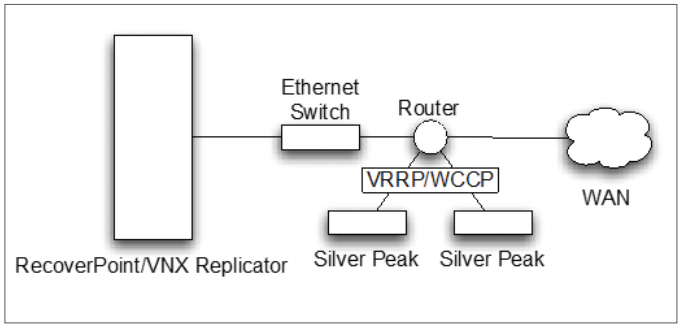

Setup and Configuration Best Practices

While in most cases Silver Peak can provide adequate optimization out-of-the-box, there are several settings that should be configured to ensure the best performance when Silver Peak software is deployed with VNX replication, RPA, vRPA, or VNX Replicator. The following configuration options assume that the VNX, and associated replication software (RecoverPoint or VNX Replicator), have been configured and are operational. Please follow the relevant Silver Peak quick start guide for the product that is being deployed. For EMC software, follow the RecoverPoint Installation and Deployment Guide or the Using VNX Replicator guide.

RecoverPoint Configuration

The following items should be configured on all RecoverPoint appliances, RPA or vRPA, which are being accelerated by Silver Peak software. For more information on configuring these options, please see the RecoverPoint documentation.

- Create a static route on the RPA/vRPA WAN port to point to the Silver Peak software
- Remove any RecoverPoint bandwidth throttles that have been configured on remote links accelerated by Silver Peak
- In specific circumstances RecoverPoint compression and deduplication can be disabled to reduce utilization of the RPA CPU
- When CPU utilization is consistently high on the RPA or vRPA due to compression and/or deduplication
- When a vRPA has been deployed with less than 4 GB of RAM

VNX Replicator Configuration

For more information on configuring VNX Replicator, see the EMC document "Using VNX Replicator" for your version of VNX software. To configure VNX Replicator a static route will be used to redirect traffic to the Silver Peak software. Additionally, any bandwidth schedules should be removed to achieve the highest performance. Bandwidth usage can be limited in the Silver Peak software, and removing bandwidth schedules allows the maximum compression, deduplication, and acceleration by Silver Peak software. For more information on configuring these options, please see the VNX Replicator documentation.

- Add a static route to the VNX data mover that uses the Silver Peak software as the next hop for replication traffic sent to remove VNX systems.
- Remove any bandwidth schedules for replication jobs that will be accelerated by Silver Peak software.

Silver Peak Configuration

The Silver Peak software should initially be configured using the relevant Quick Start Guide: http://silver-peak.com/support/user-documentation.

After initial configuration, the following settings should be used. Note that default settings have been specified to aid in troubleshooting.

To make the following changes to the tunnel select Configuration>Tunnels from the Silver Peak appliance manager. Click on the name of the tunnel that will be used for VNX replication traffic and make the changes listed below. Note that it is possible to encrypt all traffic between Silver Peak software instances. To encrypt all traffic sent across the tunnel select Mode: IPSec, and enter an IPSec Pre-shared Key. The remote Silver Peak software must be configured to support IPSec and have the same Pre-shared Key.

Tunnel Configuration

Option	Value	Default Setting
Admin	Up	Yes
Auto Discover MTU	Checked	Yes
Auto Max BW	Checked	Yes
Mode	UDP	Yes
Reorder Wait	100	Yes
FEC with <.1% WAN packet loss	Auto 1:5	**No**
FEC with >.1% WAN packet loss	Enable 1:5	**No**

Table 11: Silver Peak Tunnel Best Practices

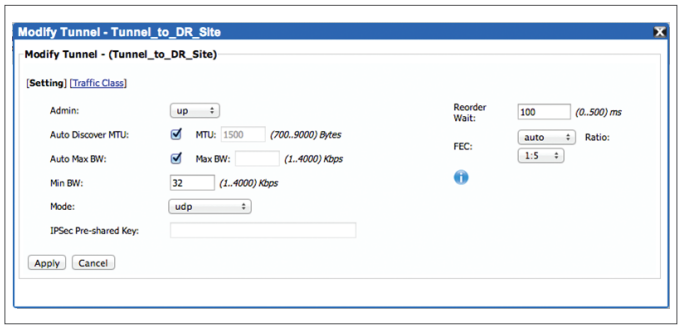

Figure 23: Tunnel Configuration

Forward Error Correction (FEC)

Forward Error Correction, FEC, is a tunnel option that is used to recover lost packets on the WAN in real time without requiring the data to be resent. Real-time packet loss can be measured in the Silver Peak appliance manager, figure 10.

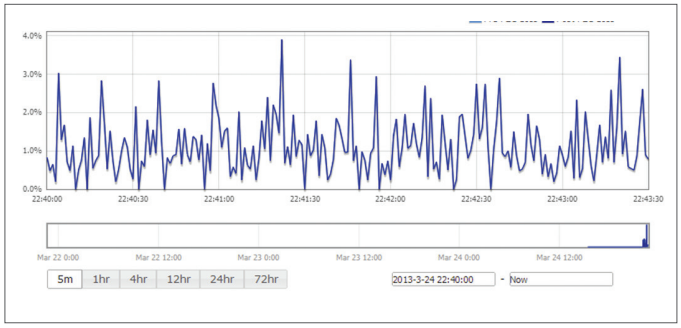

Figure 24: Monitoring Loss with Silver Peak Software

Summary, Conclusion, and Recommendations

Silver Peak software provides acceleration and optimization for EMC VNX replication, whether VNX Replicator or RecoverPoint is used for data protection. With Silver Peak, VNX replication can be performed over a longer distance, and over inexpensive WAN connections like the Internet. In addition to saving money on the WAN connection, critical business data can be better protected with a smaller recovery point objective, enabling better disaster recovery. Typical results for Silver Peak and VNX replication deployment are between a 4X and 20X performance improvement for replication throughput. In some instances performance has been shown to be even higher. Extensive testing has been performed by Silver Peak and EMC to verify compatibility, and characterize the performance of Silver Peak software with VNX replicator and RecoverPoint. All Silver Peak models are supported with VNX replicator and RecoverPoint, providing flexibility in deployment options that will suit any environment.

Silver Peak has been proven to accelerate VNX data protection solutions when 40 ms of latency or greater is present on the WAN (roughly 3991 km/2480 miles) and any of the following conditions exist:

- The WAN has packet loss or out-of-order, typically found on MPLS or Internet VPNs, or networks that are oversubscribed
- The WAN is shared by multiple applications
- The virtual version of RecoverPoint (vRPA) is deployed, and RAM limitations on the server prevent the use of deduplication and compression

Links

Silver Peak Marketplace - http://marketplace.silver-peak.com/

Silver Peak support and documentation - http://www.silver-peak.com/support

EMC Support and documentation – https://support.emc.com/

VNX Replicator documentation – https://support.emc.com/products/12781_VNX-Series

RecoverPoint documentation – https://support.emc.com/products/1226_RecoverPoint-CL