Quick Start Guide

NX Series Appliances

BRIDGE MODE

• in-line deployment •

Before You Begin

- ❑ Check your packing slip to verify that you have all the necessary items.
- ❑ Ensure that you have the associated rack mount instructions.
- ❑ Make sure you have a standard Phillips screwdriver.
- ❑ Supply circuits should be protected by a minimum 15A, maximum 20A circuit breaker.
- ❑ On the network equipment, identify the 10/100/1000 Ethernet ports and/or the 1Gbps/10Gbps fiber ports.
- ❑ Know the Appliance IP addressing and Hostname. Hostname length limited to 24 characters.

Silver Peak Systems, Inc.
2860 De La Cruz Blvd
Santa Clara, CA 95050

1.877.210.7325 (toll-free in USA)
+1.408.935.1850
www.silver-peak.com/support

PN 200257-001 Rev N

1 Rack Mount the Appliance

Silver Peak NX Appliances contain embedded drives. Accordingly, securely rack mount the appliance to stabilize it against excessive vibration, referring to the separate rack-mount instructions page.

2 Install the Appliance into the Network

a. Identify the relevant ports on the rear of the appliance.

b. Connect network cables from the appliance to the identified network equipment ports.
NOTE: If red cables are supplied, use them on WAN ports.

c. To verify Fail-to-Wire functionality later, **DO NOT connect the power cables yet**.

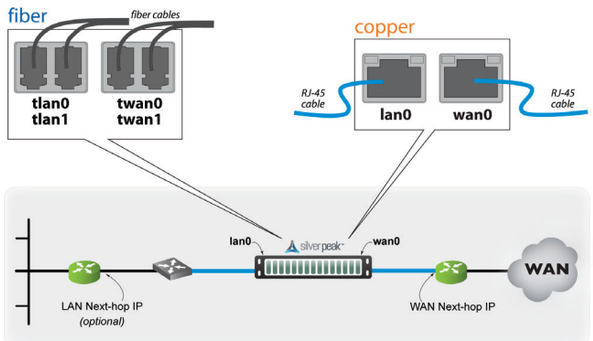

All copper RJ-45 Gigabit Ethernet interfaces in the Silver Peak appliance support MDI/MDI-X and auto-negotiation.

For fiber interfaces, consult these tables:

1/10 Gbps Fiber Interfaces NX-8700 / NX-9700	
tlan0 / twan0 Fiber Support	**tlan0 / twan0** Fail-to-Close
• 2 interfaces • LC connectors • Support multi-mode 50µ fiber	yes

NX-10700 / NX-11700 : **1/10 Gbps Fiber Interfaces**	
tlan0 / twan0 / tlan1 / twan1	
• 4 interfaces • LC connectors	• Support multi-mode 50µ fiber • Fail-to-close — yes

3 Verify Connectivity Between Network Devices

NOTE: This **does not** apply to fiber interfaces that don't support Fail-to-Close.

a. Ping a host on the remote (WAN) side of the Silver Peak appliance from a host on the local (LAN) side of the appliance.

b. If you are unable to verify connectivity, check the cabling.

c. If you still cannot verify connectivity, do not proceed.

4 Connect Power Cords

a. Connect each power cable to the Silver Peak appliance and to your local power source.

b. For redundancy, plug in **all** power cords, preferably to different power sources.

5 Turn the Power On

Some appliances power up as soon as they're plugged in, others don't. If the power is off, turn it on. If you don't plug in all the power cords, an audible alarm sounds until you do.

a. Verify that each power supply's LED illuminates green.

b. On the front panel, verify that the **Power** LED illuminates green or blue.

6 Begin the Initial Configuration

After you power up the appliance, you need to establish a management connection and then perform the initial configuration with the wizard in the browser-based graphics user interface (GUI).

Silver Peak assigns the **MGMT1** ethernet interface a default IP address of **169.254.0.1** and a subnet mask of **/16** (the same as **255.255.0.0**).

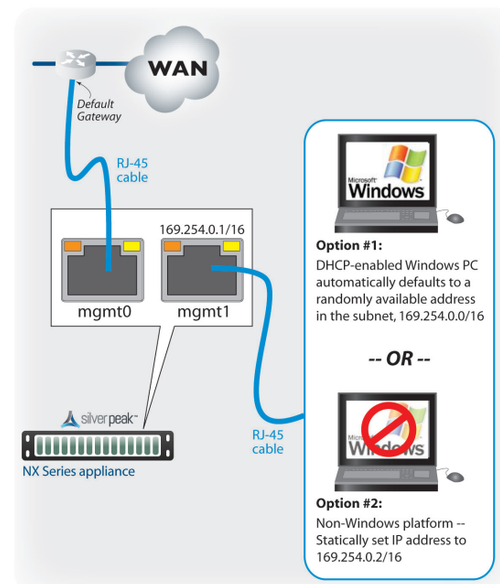

Both RJ-45 Gigabit Ethernet interfaces (**MGMT0** and **MGMT1**) support MDI/MDI-X and auto-negotiation.

a. Identify the appliance's **MGMT0** and **MGMT1** interfaces.

b. Using an RJ-45 cable, connect the appliance's **MGMT0** interface to the network equipment interface.

c. Using another RJ-45 cable, connect the appliance's **MGMT1** interface to your PC.

7 Run the Initial Configuration Wizard

Be aware that it may take up to two minutes for your PC to get an IP address and open the initial configuration page.

a. Start a browser session to connect from your laptop to **169.254.0.1**. The login page appears.

b. For the username and for the password, enter **admin**. The initial configuration page appears. Read it.

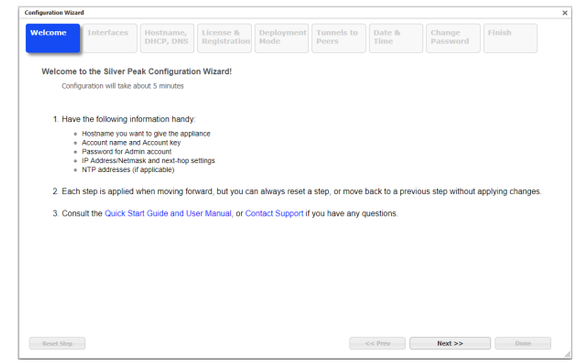

c. Click **Next**, and continue through the wizard.

8 Verify Connectivity

a. To test the connectivity of traffic through the Silver Peak appliance from a workstation on the LAN to the WAN-side router, open a command prompt and enter:

ping <WAN Next-hop IP>

b. To test the connectivity from a workstation on the LAN to the Silver Peak appliance, open a command prompt and enter:

ping <MGMT0 IP Address> , and

ping < Appliance IP Address>

9 Complete the Appliance Configuration

Refer to the *Silver Peak Appliances Operator's Guide* and the *Silver Peak Appliances Network Deployment Guide*.

Quick Start Guide

NX Series Appliances

ROUTER MODE

• out-of-path deployment •

Before You Begin

- ❑ Check your packing slip to verify that you have all the necessary items.
- ❑ Ensure that you have the associated rack mount instructions.
- ❑ Make sure you have a standard Phillips screwdriver.
- ❑ Supply circuits should be protected by a minimum 15A, maximum 20A circuit breaker.
- ❑ On the network equipment, identify the 10/100/1000 Ethernet ports and/or the 1Gbps/10Gbps fiber ports.
- ❑ Know the Appliance IP addressing and Hostname. Hostname length limited to 24 characters.

Silver Peak Systems, Inc.
2860 De La Cruz Blvd
Santa Clara, CA 95050

1.877.210.7325 (toll-free in USA)
+1.408.935.1850
www.silver-peak.com/support

PN 200257-001 Rev M

1 Rack Mount the Appliance

Silver Peak NX Appliances contain embedded drives. Accordingly, securely rack mount the appliance to stabilize it against excessive vibration, referring to the separate rack-mount instruction page.

2 Install the Appliance into the Network

a. Identify the relevant ports on the rear of the appliance.

b. Connect network cables from the appliance to the identified network equipment ports.
NOTE: If red cables are supplied, use them on WAN ports.

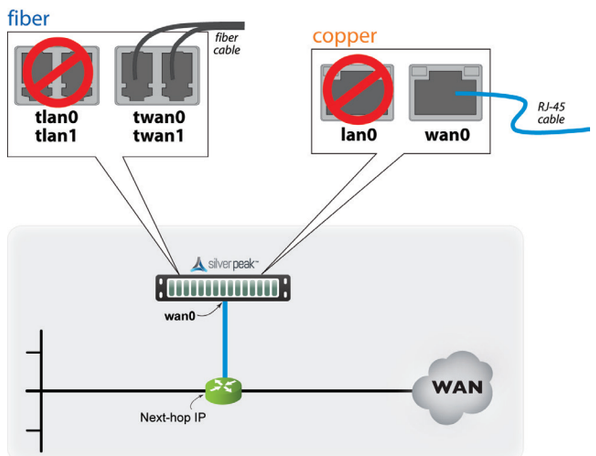

All copper RJ-45 Gigabit Ethernet interfaces in the Silver Peak appliance support MDI/MDI-X and auto-negotiation.

For fiber interfaces, consult these tables:

1/10 Gbps Fiber Interfaces NX-8700 / NX-9700	
tlan0 / twan0 Fiber Support	**tlan0 / twan0** Fail-to-Close
• 2 interfaces • LC connectors • Support multi-mode 50µ fiber	yes

NX-10700 / NX-11700 : **1/10 Gbps Fiber Interfaces**	
tlan0 / twan0 / tlan1 / twan1	
• 4 interfaces • LC connectors	• Support multi-mode 50µ fiber • Fail-to-close — yes

3 Connect Power Cords

a. Connect each power cable to the Silver Peak appliance and to your local power source.

b. For redundancy, plug in **all** power cords, preferably to different power sources.

4 Turn the Power On

If the power is off, turn it on. If you did not plug in all the power cords, an audible alarm sounds until you do.

a. Verify that each power supply's LED illuminates green.

b. On the front panel, verify that the **Power** LED illuminates. It may be green or blue.

5 Begin the Initial Configuration

After you power up the appliance, you need to establish a management connection and then perform the initial configuration with the wizard in the browser-based graphics user interface (GUI).

Silver Peak assigns the **MGMT1** ethernet interface a default IP address of **169.254.0.1** and a subnet mask of **/16** (the same as **255.255.0.0**).

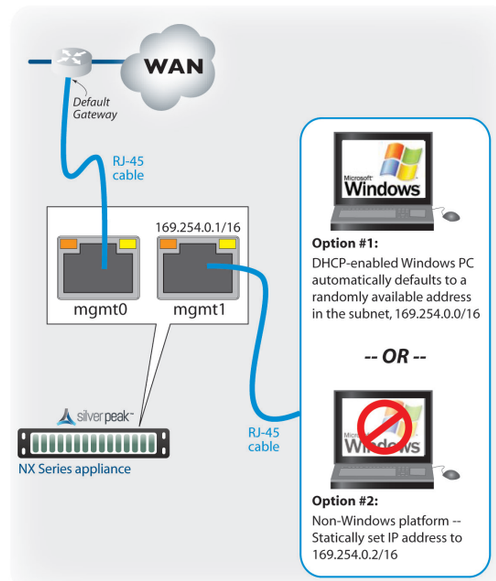

Both RJ-45 Gigabit Ethernet interfaces (**MGMT0** and **MGMT1**) support MDI/MDI-X and auto-negotiation.

a. Identify the appliance's **MGMT0** and **MGMT1** interfaces.

b. Using an RJ-45 cable, connect the appliance's **MGMT0** interface to the network equipment interface.

c. Using another RJ-45 cable, connect the appliance's **MGMT1** interface to your PC.

6 Run the Initial Configuration Wizard

Be aware that it may take up to two minutes for your PC to get an IP address and open the initial configuration page.

a. Start a browser session to connect from your laptop to **169.254.0.1**. The login page appears.

b. For the username and for the password, enter **admin**. The initial configuration page appears. Read it.

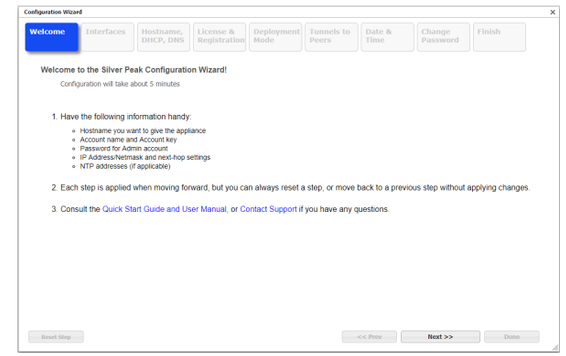

c. Click **Next**, and continue through the wizard.

7 Complete the Appliance Configuration

Refer to the *Silver Peak Appliances Operator's Guide* and the *Silver Peak Appliances Network Deployment Guide*.